US007717119B1

(12) **United States Patent**
Sinclair, Jr.

(10) **Patent No.: US 7,717,119 B1**
(45) **Date of Patent: *May 18, 2010**

(54) **TOBACCO PRODUCT**

(75) Inventor: **Daniel S. Sinclair, Jr.**, Mandeville, LA (US)

(73) Assignee: **Blunt Wrap U.S.A. Inc.**, Mandeville, LA (US)

(*) Notice: Subject to any disclaimer, the term of this patent is extended or adjusted under 35 U.S.C. 154(b) by 0 days.

This patent is subject to a terminal disclaimer.

(21) Appl. No.: **12/539,346**

(22) Filed: **Aug. 11, 2009**

Related U.S. Application Data

(60) Continuation of application No. 11/058,916, filed on Feb. 15, 2005, now Pat. No. 7,571,730, and a division of application No. 10/361,985, filed on Feb. 11, 2003, now Pat. No. 6,854,471, and a division of application No. 10/090,932, filed on Mar. 5, 2002, now Pat. No. 6,526,986, and a continuation of application No. 09/944,979, filed on Aug. 31, 2001, now Pat. No. 6,357,448, and a division of application No. 09/456,738, filed on Dec. 7, 1999, now Pat. No. 6,321,755.

(51) **Int. Cl.**
A24F 47/00 (2006.01)

(52) **U.S. Cl.** **131/347**; 131/365

(58) **Field of Classification Search** 131/347, 131/360, 365; 206/242
See application file for complete search history.

(56) **References Cited**

U.S. PATENT DOCUMENTS

191,501	A	5/1877	Willis	
200,889	A	3/1878	Bishop	
304,582	A	9/1884	Thoss	
389,975	A	9/1888	Riedel	
657,403	A	9/1900	Du Brul	
663,073	A	12/1900	Coughtry	
725,671	A	4/1903	Butler	
1,104,779	A	7/1914	Cooley	
1,223,362	A	4/1917	Bock	
3,385,302	A	5/1968	Wattenford	
3,580,433	A	5/1971	Kastner	
4,452,257	A	6/1984	Cartwright et al.	
5,147,463	A	9/1992	Eilerman et al.	
5,645,089	A	7/1997	Burger et al.	
5,762,074	A	6/1998	Garner	
5,782,246	A	7/1998	Axelrod	
6,164,443	A	12/2000	Mitchell et al.	
6,357,448	B1 *	3/2002	Sinclair, Jr.	131/365
6,526,986	B1 *	3/2003	Sinclair, Jr.	131/365
6,742,525	B2 *	6/2004	Sinclair, Jr.	131/365

(Continued)

FOREIGN PATENT DOCUMENTS

DE	352277	4/1922

(Continued)

Primary Examiner—Carlos Lopez
(74) *Attorney, Agent, or Firm*—Garvey, Smith, Nehrbass & North, L.L.C.; Brett A. North

(57) **ABSTRACT**

A tobacco product is formed by rolling moistened tobacco leaves about a cylindrical form casing and allowing the leaves to dry to form a shell. After the form casing is removed a consumer can fill the shell with crushed tobacco leaves of a favorite blend, thereby eliminating some steps in the making of a "roll-your-own" tobacco product.

7 Claims, 1 Drawing Sheet

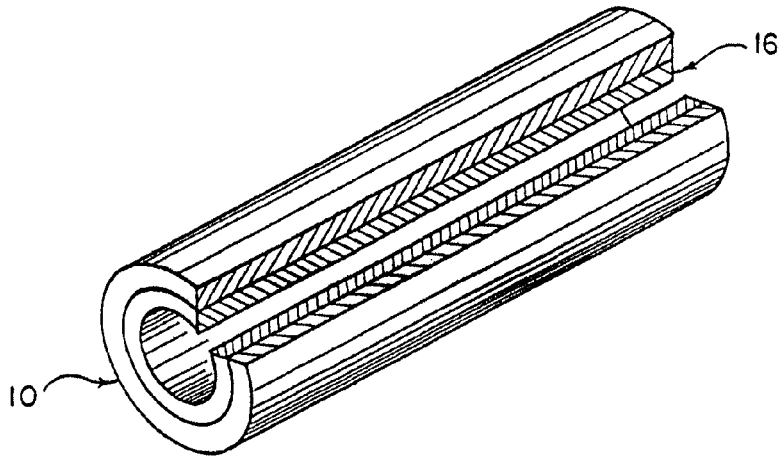

U.S. PATENT DOCUMENTS

6,854,471	B1 *	2/2005	Sinclair, Jr.	131/347
7,543,590	B2 *	6/2009	Sinclair et al.	131/347
7,571,730	B2 *	8/2009	Sinclair, Jr.	131/347
7,604,008	B2 *	10/2009	Gomez	131/365

FOREIGN PATENT DOCUMENTS

GB	1230576	5/1971

* cited by examiner

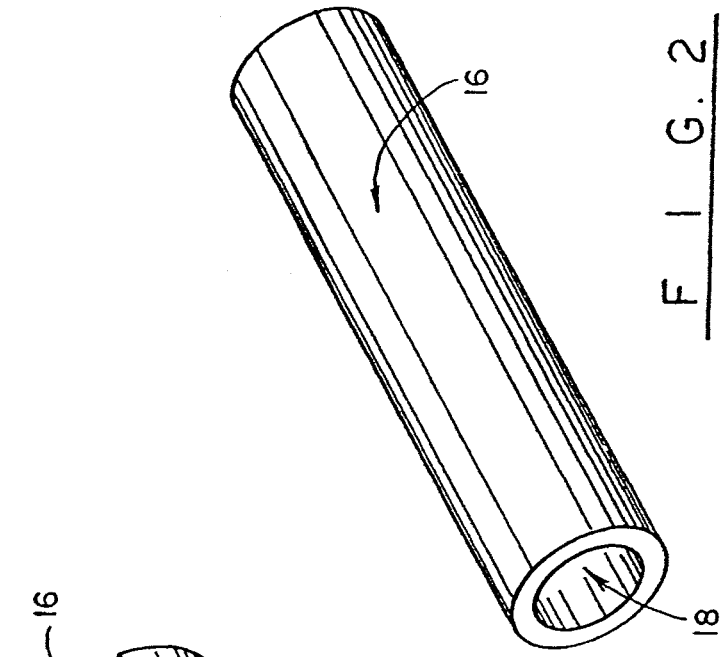

FIG. 2

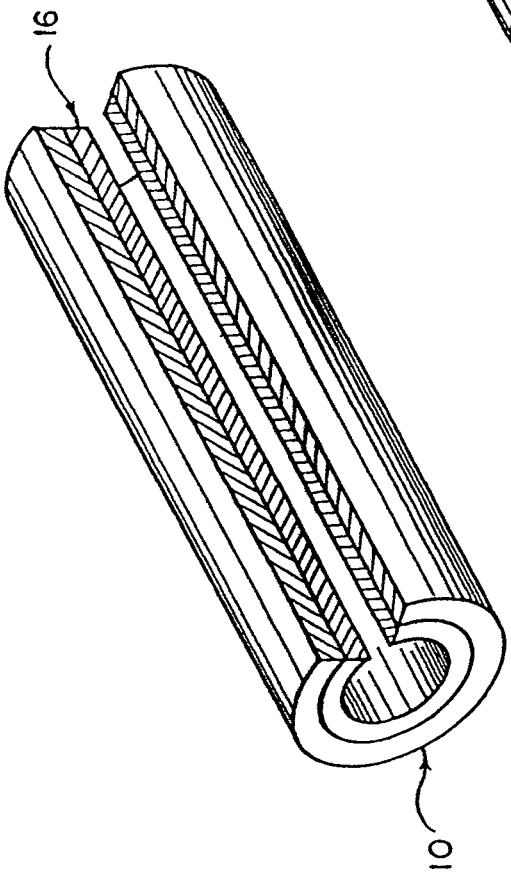

FIG. 1

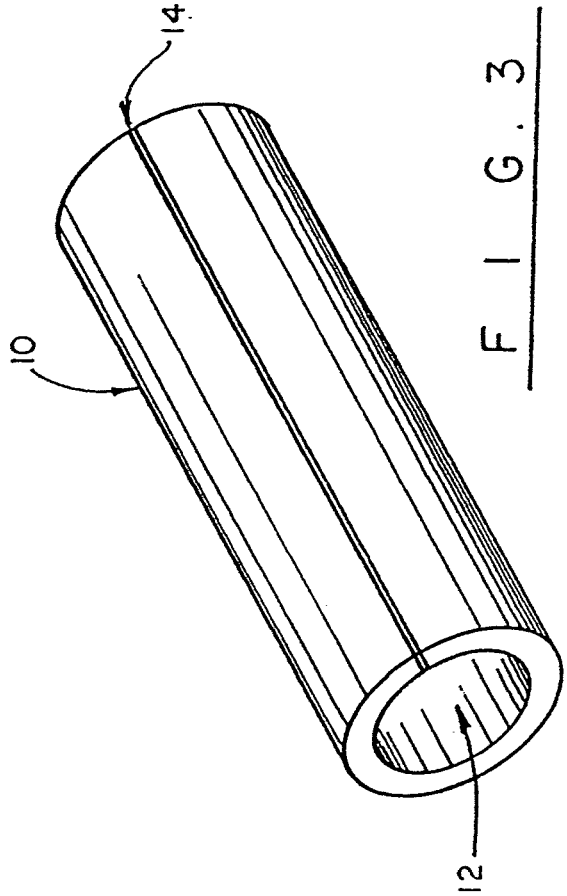

FIG. 3

TOBACCO PRODUCT

CROSS-REFERENCE TO RELATED APPLICATIONS

This is a continuation of U.S. patent application Ser. No. 11/058,916 (issuing as U.S. Pat. No. 7,571,730 on Aug. 11, 2009), which was a divisional of U.S. patent application Ser. No. 10/361,985, filed Feb. 11, 2003 (now U.S. Pat. No. 6,854,471), which was a divisional of U.S. patent application Ser. No. 10/090,932, filed Mar. 5, 2002 (now U.S. Pat. No. 6,526,986), which was a continuation of U.S. patent application Ser. No. 09/944,979, filed Aug. 31, 2001 (now U.S. Pat. No. 6,357,448), which was a divisional of U.S. patent application Ser. No. 09/456,738, filed Dec. 7, 1999 (now U.S. Pat. No. 6,321,755).

Each of the above referenced applications are incorporated herein by reference and priority to each is hereby claimed.

STATEMENT REGARDING FEDERALLY SPONSORED RESEARCH OR DEVELOPMENT

Not applicable

REFERENCE TO A "MICROFICHE APPENDIX"

Not applicable

BACKGROUND OF THE INVENTION

The present invention relates to tobacco products, and more particularly to a cigar shell for "roll your own" tobacco products.

In recent years, smoking of cigars has become in vogue, and numerous cigar shops opened around the world to satisfy this growing trend. The variety, quality and size of ready-made cigars satisfy the majority of the public. However, a small segment of connoisseurs insist that nothing can compare with the taste and smell of custom-blended tobacco products. These knowledgeable individuals are very selective in the manner their cigars are rolled and in the grade of tobacco used.

A still smaller segment of cigar aficionados prefers to roll their own cigars. They buy tobacco leaves or cigar wrapping and use their preferred brand of crushed tobacco. Some people buy inexpensive cigars, cut them with a sharp blade along the side and carefully pry the cut cigar open. The innermost layers are then removed and substituted with a favorite brand of crushed tobacco, which may come from cigarettes or bulk tobacco blend. The user then brings the cut edges of the cigar together, closing the outer layers of the cigar over the "stuffing." The edges are then sealed with a liquid or honey, and a new cigar is ready for a smoke.

Some reports indicate that the roll-your-own tobacco market is flourishing. In some countries, the roll-your-own products now hold a substantial share of the tobacco market, and their consumers represent more than 10% of the smoking population. This may be explained by the ability of a consumer to create a tailor-made product, as opposed to commercially available types of cigars.

A disadvantage of the existing method of making such custom-made cigars is that a consumer has to be skillful in the rolling of cigars, that is to have a certain finger dexterity, which would allow him to make the cigar shell without crushing the tobacco leaves. Inexperienced people often become frustrated when the finished product collapses because the cigar was not properly rolled.

The present invention contemplates provision of a tobacco product, or shell, for rolling a custom-made cigar and a method of making the shell.

SUMMARY OF THE INVENTION

It is, therefore, an object of the present invention to provide a device for making a tobacco shell.

It is another object of the invention to provide a method of making a shell suitable for use in rolling a custom-made cigar.

It is a further object of the present invention to provide a method of making a shell for a custom-rolled cigar.

These and other objects of the invention are achieved through a provision of a shell that eliminates some steps in the making of a "roll-your-own" tobacco product. Wrapping moistened tobacco leaves around a cylindrical form casing forms the shell. The leaves are allowed to dry, and the shell is ready for sale to a consumer. After the form casing is removed, the consumer can fill the shell with a favorite blend of tobacco.

In one of the embodiments, a longitudinal slit is formed through a wall of the shell to allow prying open of the shell body and removal of the form casing. After crushed tobacco leaves are deposited into the central opening of the shell, the edges of the slit are moistened and brought together to seal the slit. A cigar is ready for smoking.

BRIEF DESCRIPTION OF THE DRAWINGS

Reference will now be made to the drawings, wherein like parts are designated by like numerals, and wherein:

FIG. **1** is a perspective, partially cross-sectional view of the shell in accordance with the present invention wrapped about a form casing.

FIG. **2** is a perspective view of the form casing for use in the method of the present invention; and

FIG. **3** is a perspective view of the shell made in accordance with the present invention.

DETAILED DESCRIPTION OF THE PREFERRED EMBODIMENT

Turning now to the drawings in more detail, numeral **10** designates a tobacco product shell of the present invention. The shell **10** is formed as a generally cylindrical hollow body with a central opening **12** extending along the shell's longitudinal axis. The shell **10** can be made in any desired length and with a predetermined diameter. A longitudinal slit **14** extends through a wall of the shell body; the purpose of the slit **14** will be explained in more detail hereinafter.

A form casing **16** is provided for the practice of the invention. The form casing **16** is formed from a rigid material in a form of a cylinder of a predetermined length and outer diameter. The form casing **16** can be made either hollow, with a central opening **18**, or as a solid body. It is desirable that the form casing be inflexible and strong enough to withstand forces applied to the form casing **16** when a cigar shell **10** is rolled.

To form a shell **10**, an operator selects the appropriate form casing **16** from a set of casings that may be available in the shop. Tobacco leaves are prepared for rolling by application of a small amount of moisture to the leaves in order to make them more pliable. The operator carefully wraps the tobacco leaves about the outer surface of the form casing **16**, slightly compressing the leaves to cause them to adhere together.

The next step involves rolling of the form casing **16** with a tobacco leaf wrapped about it on a hard level surface, such a

worktable. The steps of wrapping and rolling continue until the necessary layers of tobacco leaves have been rolled to form a shell **10** of a desired thickness.

It is known that wet tobacco leaves tend to adhere to each other. Therefore, subsequent application of moisture, in many cases, may not be necessary. Still, if the leaves become brittle and there exists a danger of breaking the shell **10**, the operator applies moisture to the leaves to retain their pliability.

Once the shell **10** has been created, the operator allows the shell to remain wrapped around the form casing **16** until dry. Cutting through the wall of the shell **10** with a sharp knife or a razor then makes the slit **14**. A finished shell **10** is then removed from the form casing **16** and is wrapped either in cellophane or another similar type of outer wrapper.

To facilitate disengagement of the shell **10** from the form casing **16**, an outer surface of the form casing **16** may be pre-coated with a non-stick material. In this manner, the danger of an operator damaging the shell **10** is minimized. The non-stick coating may be of a permanent type or applied immediately before wrapping of the tobacco leaves. It is important to select a coating material that would not leave an undesirable taste or odor on the tobacco leaves. A polytetrafluoroethylene (such as that sold under the trademark Teflon®) coating may serve well for this purpose.

The finished shells **10** can be packaged in conventional containers and sold directly to customers who desire to roll their own cigars, but do not have the required finger dexterity. An ultimate user will remove the shell **10** from its outer wrapper (not shown) and pry the shell **10** open by forcing the shell apart along the slit. The user will then fill the interior opening **12** with any desired blend of the favorite tobacco and seal the slit **14** by applying a small amount of moisture to the edges of the slit **14** and bringing the edges together. A small amount of pressure may be applied to the shell **10** to cause sealing of the slit **14**. In this manner, a custom-tailored cigar is made, answering all requirements of a connoisseur as to the tobacco blend, size and length of a cigar.

If desired, a kit for roll-your-own tobacco products can be manufactured and sold through tobacconists and specialty shops. The kit would contain a set of form casings **16**, an initial supply of tobacco wrapping leaves for the making of the shell **10** and a set of instructions. The user will be able to make individual shells in privacy, at the most convenient time for the user time. In this way, the formed shells will be always the freshest.

In the alternative, a special wrapping material may be used for making of the shells. This material is available on the market; it is made of homogenized tobacco paper that can be wrapped about the form casing **16**.

It is also possible to make the form casings **16** disposable. With this method, the shell **10** will remain wrapped about the form casing **16** until such time as a smoker desires to make a cigar. The wrapped shell **10** is then peeled off the form casing **16** and used in a conventional manner. The benefit of such a method is that the danger of a shell collapsing during shipment is eliminated.

Still another approach would be to use a rigid core form casing **16** with a non-stick coating on the outer surface and a secondary form casing made of cardboard that is slipped over the first form casing. The tobacco leaves are wrapped about the second cardboard form casing to make a shell. A cellophane sleeve is slipped over the finished shell and the first inner form casing is removed. The hardened shells with the cardboard form casing are shipped for sale. In that case, the finished product would look very much similar to the view shown in FIG. **1**, except that the form casing **16** will be made of a cardboard material.

Stuffing of crushed tobacco into the cigars can be accomplished using a conventional funnel, the nose of which is lightly smaller than the diameter of the inner opening of the shell. The funnel, if desired, can be made a part of the kit containing one master form casing and a plurality of cardboard form casings. In such instance, the slit **14** may not be required, and the shell **10** will be constructed as a hollow cylindrical body with a slit-free sidewall.

Many changes and modifications can be made in the present invention without departing from the spirit thereof. I, therefore, pray that my rights to the present invention will be limited only by the scope of the appended claims.

The invention claimed is:

1. A product including a cigar tube for holding an end user's tobacco fill material, comprising:

a) a cigar tube comprising a sheet of material, the sheet of material being rolled into a shaped tube that has a longitudinal bore, a longitudinal opening in the sheet of material for adding tobacco material to the bore, and edges that can be moved apart so that tobacco fill material can be added to the bore via the longitudinal opening; and

b) a wrapper, wherein:

the cigar tube is packaged in the wrapper, and

the tube remains rolled in a tube shape inside the wrapper, and

the packaged tube is not filled with tobacco to form a complete cigar.

2. The apparatus of claim **1** wherein multiple layers define the sheet of material.

3. A product including a cigar tube for holding an end user's tobacco fill material, comprising:

a cigar tube comprising a sheet of material, the sheet of material being rolled into a shaped tube that has a longitudinal bore, a longitudinal opening in the sheet of material for adding tobacco material to the bore, and edges that can be moved apart so that tobacco fill material can be added to the bore via the longitudinal opening in the sheet of material; and

a wrapper, wherein:

the cigar tube is packaged in the wrapper, and

the tube remains rolled in a tube shape inside the wrapper after packaging.

4. A tobacco product comprising:

(a) a sheet of rolled material, the sheet having a longitudinal interior portion and longitudinal edge portions;

(b) a wrapper that contains the sheet of rolled material, and

(c) the edge portions being unsealed so that they can be moved apart to open the sheet of rolled material and allow an end user to add tobacco to the longitudinal interior portion after removing it from the wrapper.

5. The tobacco product of claim **4**, further comprising a form casing and wherein the shell is wrapped about the form casing.

6. The tobacco product of claim **4**, wherein the shell remains rolled in a tube shape inside the wrapper.

7. The tobacco product of claim **4**, wherein multiple layers define the sheet of material.

* * * * *